Control and Power Sharing Strategy of Dual Three-Phase Permanent Magnet Synchronous Motor for Fuel Cell and Battery Trains

Nursaid Polater , Tamer Kamel, Pietro Tricoli

nxp857@student.bham.ac.uk, t.kamel@bham.ac.uk, p.tricoli@bham.ac.uk

BCRRE

Abstract

Dual three phase permanent magnet synchronous machines (DTPMSM) are gaining attraction nowadays due to their remarkable superiorities such as decreasing of harmonic distortion and total losses, having higher power density and tolerance against to fault. High reliability of these motors in case of any phase failure, which is the main reason of interest to multiphase machine, is vital parameter for traction systems. This study addresses the power-sharing strategy for DTPMSM in order to enable better utilization of energy sources and reduce the conversion step by using the second winding of DTPMSM as a DC-link.

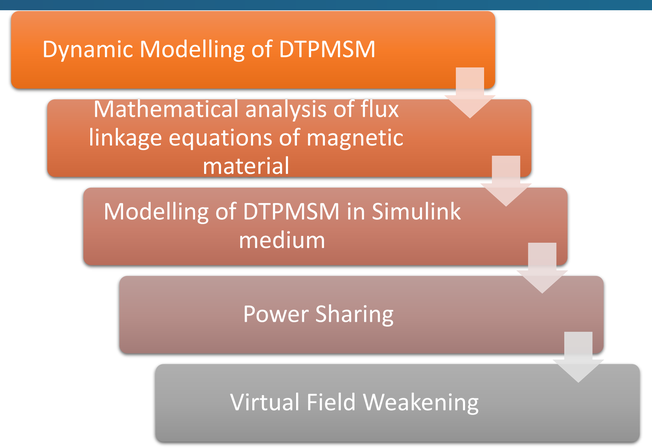

Introduction

The main requirements of railway systems are listed as reliable and robust, efficient, compatibility with other equipment, low cost/maintenance, able to control speed, regenerative braking, quiet etc.

Therefore, the aim of the research is examining speed-current control methods, identifying optimal power sharing strategy for fuel cell (FC)/battery trains, and to be sure to have reliable propulsion system. In accordance with these purposes, following methodologies are able to give desired results.

Implementation of virtual field weakening (VFW) which enables to compensate any FC voltage drop, reliability of traction system increases as well as fixed DC/DC boost converters are able to be removed from power conditioning unit. By doing so, volume of the converter will reduce, and overall efficiency of the power-conditioning unit will increase thanks to lower conversion step.

Methodology

In order to eliminate the challenges such as controlling the induced voltage while faulty operating condition, extending range of operation speed, share the power efficiently, and compensate any FC voltage drop the following methodologies will be applied.

Virtual FW & Power Sharing

FC power applications use DC/DC step up converter mostly to compensate any FC voltage drop due to the load. The main benefit will be removing of the DC/DC boost conversion steps if it is possible. Yet, the motor should be controlled to achieve same level of power and torque, whatever is the voltage of FC. When the FC voltage decreases, current on the IGBT goes up to keep same power. Therefore, VFW is proposed and triggered by not only speed but also torque. It has been expressed with the equation given below.

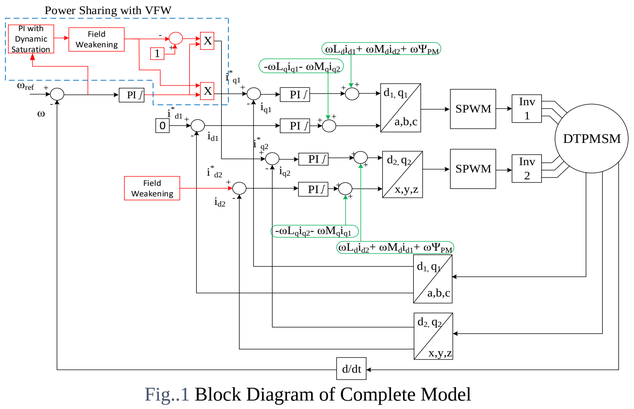

Fig..1 Block Diagram of Complete Model

$$U = \sqrt{\omega^2\left[\psi_{pm}{}^2 + \left(L_q{}^2 + M_q{}^2 + 2L_q\, M_q\right) * \frac{3T_{em}}{2p\psi_{pm}}\right] + \omega 2R_s\psi_{pm}\left(\frac{3T_{em}}{2p\psi_{pm}}\right) + R_s\left(\frac{3T_{em}}{2p\psi_{pm}}\right)^2}$$

Results

Proposed power sharing strategy in Fig. 1 assumed that rated power of FC is a reference and supply power to the load. The battery is existing as a second supplier and will be employed either in case of high-power demand or storing the excess energy at the low power. The energy storage unit here is charging via DTPMSM with this configuration. That means DTPMSM operates in the same way as the DC-link of traditional converters.

After all, the VFW method would enable the removal of one of the DC/DC conversion steps from power converter architecture. Due to having two three-phase winding sets, FC voltage drop will be regulated by one of the winding sets. If one of the DC to DC step-up converters can be removed, traction drive system will be more compact, cheaper, and lighter.

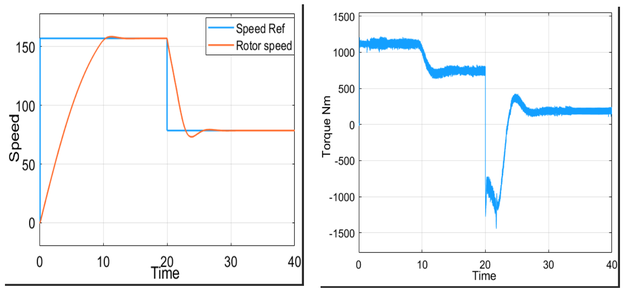

Fig. 2. Speed and torque waveforms for DTPMSM

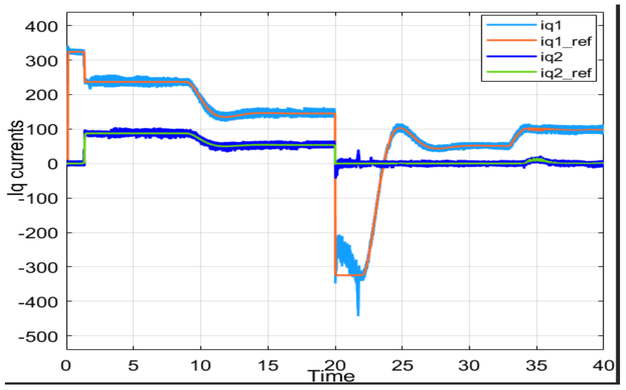

Fig. 3 iq1 and iq2 current waveforms

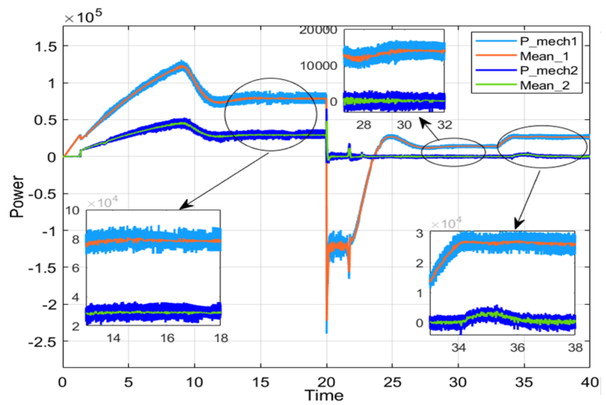

Fig. 4. Power of two individual winding sets

Conclusion

The simulated model is surface type DTPMSM and has two DC power sources as 30kW battery and 80kW FC rated power respectively. FC is used as main power source in this application and battery is being as secondary energy source. It can be clearly seen from the simulation results that power can be split successfully between the winding sets and this could be used either feeding the motor or charging the battery unit in case of regenerative braking or operation with light loads. In addition, it is obvious that oscillation exists in the power graphs but 10 to15 kW oscillation is acceptable range compare to110kW motor.

It is believed that limiting the back EMF which can be done by controlling the flux enable to implement VFW. However, reducing the flux linkage will result in lower torque which depends on the flux linkage and this might be compensated by controlling the other winding with an angle which is doing FW. Then, if the current id_1 is added to the total current vector, angle of current is changing automatically and different phase shift is enabled between the two currents. This is desired to regulate the back EMF from first winding when FC voltage decreases by using the id_2. When the FC voltage goes down then angle changes as well and staying within the linear modulation of the inverter is achieved.